AWNINGS

# ZENITH

Fully cassetted folding arm awning

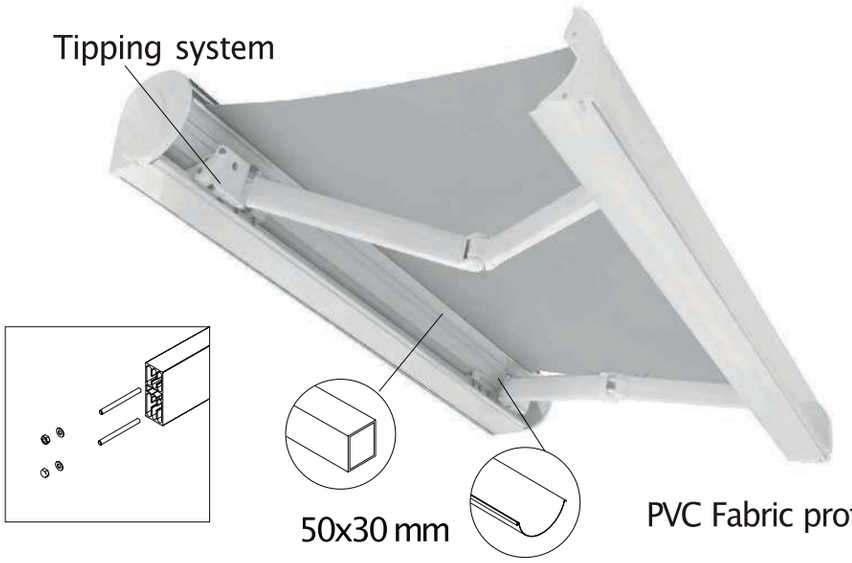


PVC Fabric protection for the whole awning width

**ZENITH is a retractable awning with a fully closing cassette on a rectangular bar 50x30mm.** Functional and reliable this awning gets tipping system (BAT patented) brackets that enables a complete perfect closing of the front bar even at maximum inclinations.

## Installation

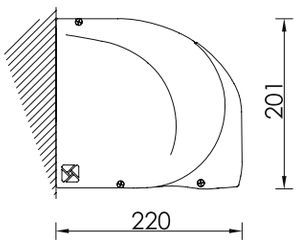


Ceiling installation

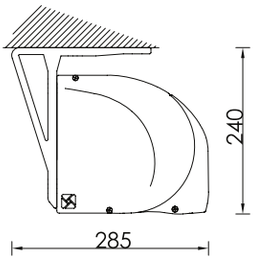


## RAL Colours

9010 White (Standard)

## Min / Max Width

Minimum 2220mm
Maximum 12000mm

## Minimum width to accommodate arm size

| Projection (cm) | Width (cm) 2 brackets |
|---|---|
| 160 | 210 |
| 210 | 260 |
| 260 | 310 |
| 310 | 360 |
| 360 | 410 |
| 410 | 481 |
| 435 | 506 |

UK CA CE